XLP XL805

BY JOHNSON CONTROLS

CoolWare v7.3.1

Registered To: Johnson Controls-USA - Andrew Howard

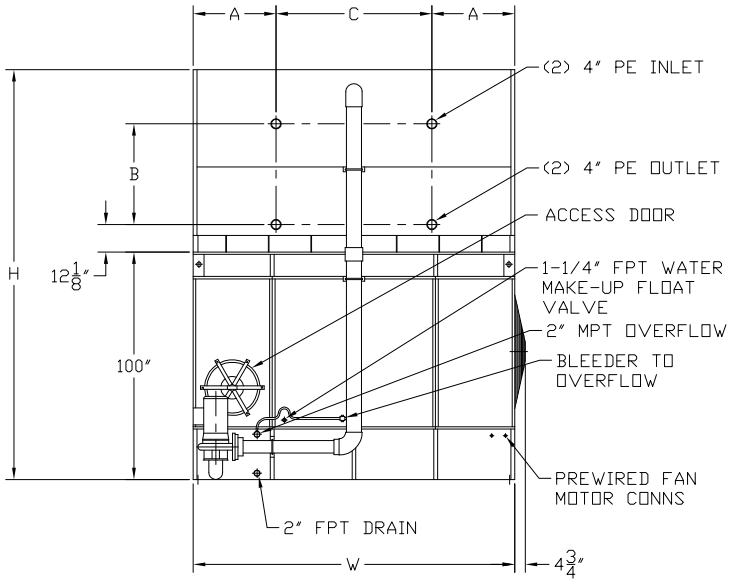

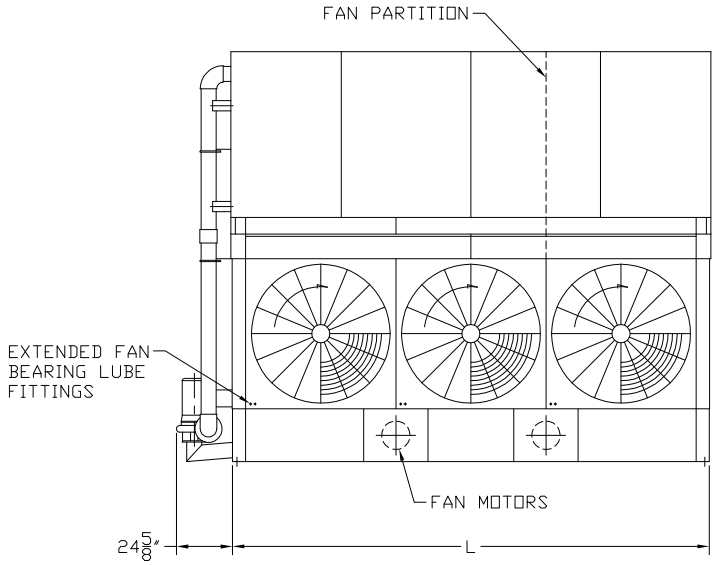

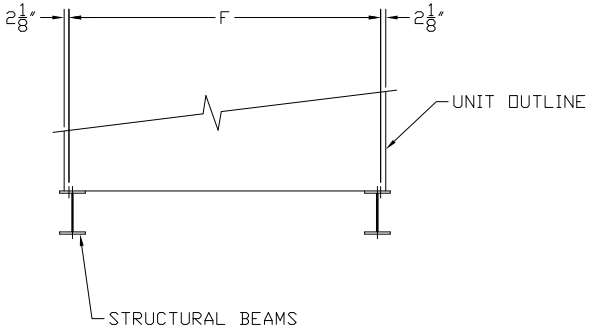

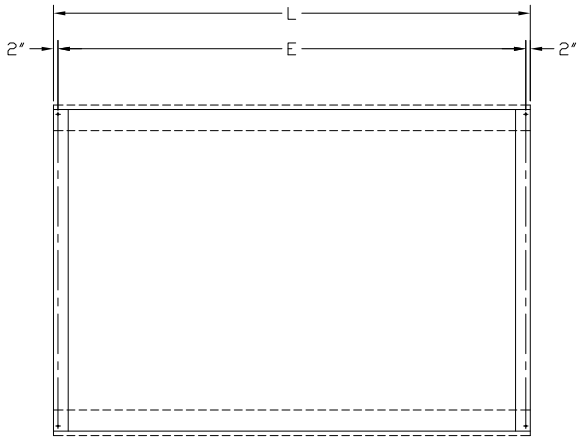

DO NOT USE FOR CONSTRUCTION --- PRODUCT DRAWINGS AVAILABLE ON REQUEST.

Dimension List

A:	36.4in	B:	44.3in	C:	68.5in	E	208.0 in	F:	137.0 in	H	180.3 in	L	211.0 in
W	141.3 in												