GENERAL NOTES

1) ALL PIPE NOZZLES EXTEND 6" OUTSIDE SHELL UNLESS INDICATED OTHERWISE.
2) ALL WELDS: WPS 109, 1002, 1005, 2002, AND 4004 APPLY UNLESS INDICATED OTHERWISE
3) SA516-70 MAY BE SUBSTITUTED FOR SA36.
4) SA106B PIPE MAY BE SUBSTITUTED FOR SA53B SEAMLESS AND VICE VERSA.
5) ALL BOLT HOLES STRADDLE CENTERLINE.

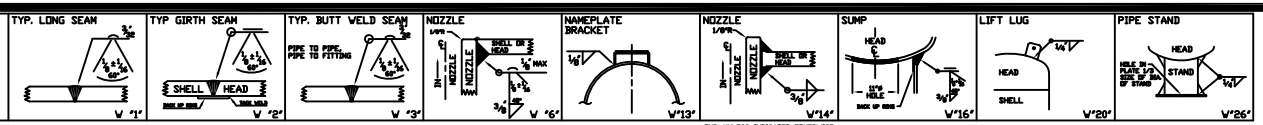

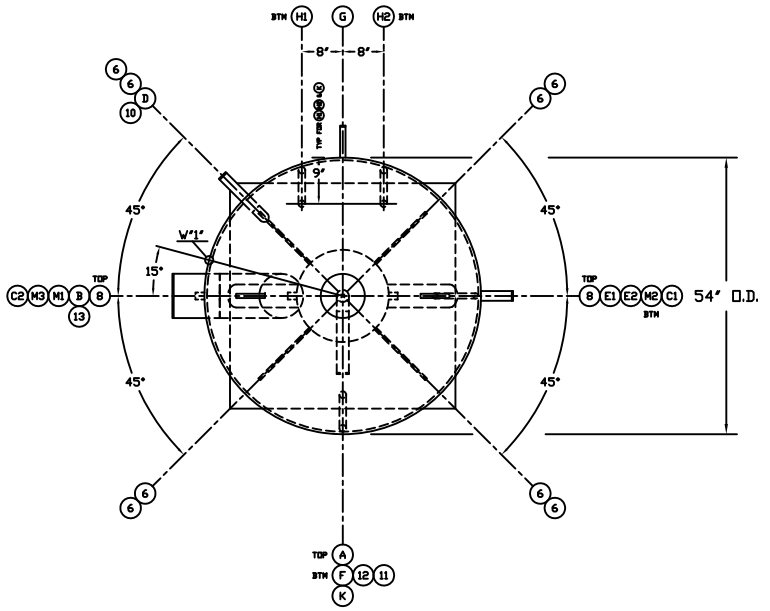

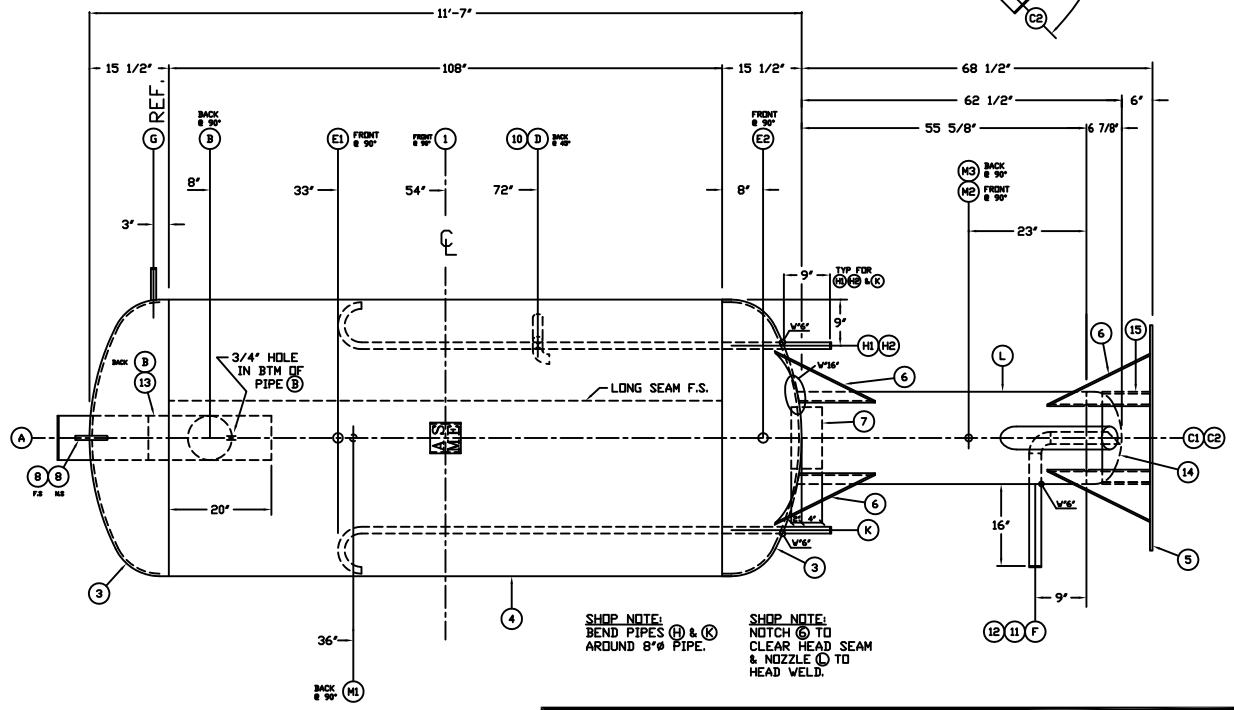

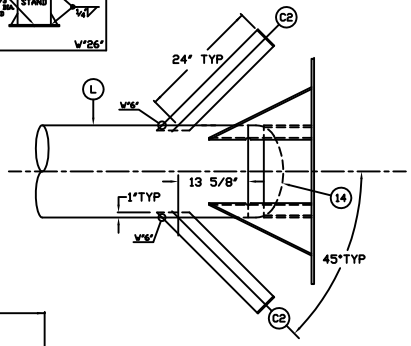

CUSTOMER	S.W.R., INC. / AMERICANA FOODS DALLAS,TX
P.O. NO.	9644

TEST WITH OIL

DUAL STAMP

ASME DATA PLATE

Refrigeration Valves and Systems Corp. PRECISION

U

NATIONAL BOARD NO.

CERTIFIED BY REFRIGERATION VALVES & SYSTEMS CORPORATION BRYAN, TEXAS

W

MAWP 150 PSI AT 300 °F

MDMT -40 °F AT 60 PSI

S/N 94196 YEAR BUILT 1994

BILL OF MATERIALS

NOZZLE SCHEDULE

ITEM	QTY	SIZE	TYPE	RATING	MATERIAL	SERVICE	LENGTH	REINFORCEMENT
Q								
P								
O								
N								
M	3	3/4"	CPLG	3000#	SA105	TEST		
L	1	18"	PIPE	S/STD	SA106B	SUMP	56 3/8"	
K	1	3/4"	PIPE	S/80	SA106B	OIL POT VENT	112"	
J								
H	2	3/4"	PIPE	S/80	SA106B	PUMP DISCH VENT	112"	
G	1	3/4"	PIPE	S/80	SA106B	SAFETY RELIEF	7"	
F	1	2"	PIPE	S/40	SA106B	OIL DRAIN	22"	
E	2	1 1/2"	PIPE	S/80	SA106B	LEVEL COLUMN	7"/9"	
D	1	1 1/2"	PIPE	S/80	SA106B	LIQUID MAKE-UP	9"	
C	2	4"	PIPE	S/40	SA106B	PUMP SUCTION	28"	
B	1	8"	PIPE	S/40	SA106B	SUCTION OUTLET	9"	
A	1	8"	PIPE	S/40	SA106B	SUCTION INLET	41 1/2"	

SHELL, HEADS, INTERNALS, SUPPORTS

ITEM	QTY	DESCRIPTION	MATERIAL
16			
15	1	18" O.D. S/STD PIPE x 9 5/16" LNG	SA106B
14	1	18" O.D. x 5/16" THK 2:1 ELLIP HEAD	SA516-70
13	1	8" S/40 B.W. 90° ELL	SA234 WPB
12	1	2" S/40 B.W. 90° ELL	SA234 WPB
11	1	2" S/40 PIPE X 12 1/2" LONG (B.O.E @ 45°)	SA106B
10	1	1 1/2" S/80 B.W. 90° ELL	SA234 WPB
9			
8	2	STD LIFT LUG	SA36
7	1	PLATE 10 GA x 6" x 10 7/8" LNG CROSSPLATE	SA36
6	4	PLATE 1/2" THK x 14" x 20" (ONE CUTS TWO)	SA36
5	1	PLATE 1/2" THK x 42" x 42"	SA36
4	1	54" O.D. x 3/8" THK ROLLED SHELL x 108" LNG	SA516-70
3	2	54" O.D. x 3/8" THK 2:1 ELLIP HEADS	SA516-70
2	4	FB 1/8" THK x 1 1/2" WIDE BACKING STRIP	SA36
1	1	STD ASME DATA BRKT x 6" DEEP	SA36

VESSEL DESIGN SPECIFICATIONS

DESIGN & CONSTRUCTION IN ACCORDANCE WITH SECTION VIII DIV. 1 ASME CODE FOR PRESSURE VESSELS 1998 EDITION & ADDENDA TO A98

SHELL	SA516-70	3/8"	(.389"MIN.)	HEADS	SA516-70	3/8"	(.379"MIN.) 2:1
RT	SHELL: NONE / HEADS: NONE			HT	NO		CA 0
M.A.W.P.	150	PSI		AT	-20 TO 300 °F		TO DUAL STAMP 60 PSI @ -40 °F
HYDROTEST	225	PSI		PAINT	SHOP PRIMER		EMPTY WEIGHT 4,200 LBS

REVISIONS

NO	DATE	BY	DESCRIPTION
1			
2			
3			
4			
5			
6			

TITLE: 54" O.D. X 11'-7" VERT 150# ASME RECIRCULATOR

CAD

Refrigeration Valves and Systems Corp. PRECISION
1520 CROSSWIND DRIVE BRYAN, TEXAS 77808

DRAWN BY	MM	SERIAL NO.	94196	SCALE	1"=1'-0"	DRAWING NO.
CHECKED BY		TO SHOP		DATE	2-3-94	L0042-1D