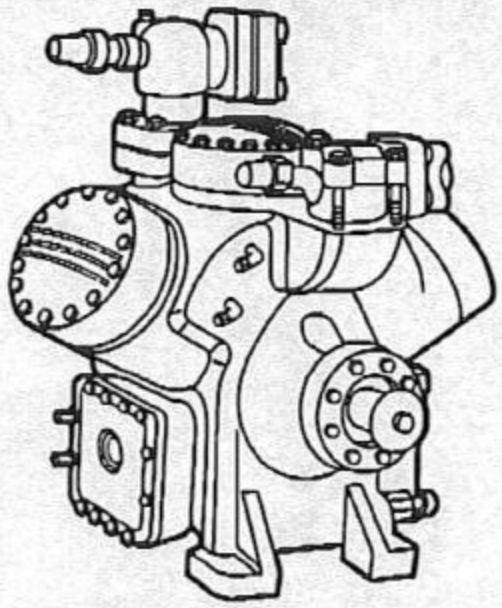

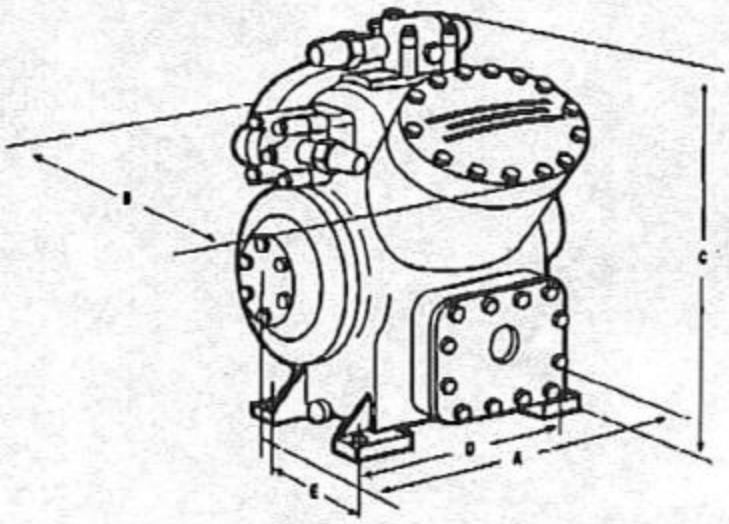

APPLICATION DATA

MODEL NO.	NOMINAL HORSEPOWER R-12	NOMINAL HORSEPOWER R-22	NOMINAL HORSEPOWER R-502	NO. OF CYL.	BORE (IN.)	STROKE (IN.)	CFM @ 1075 RPM	RATINGS IN TONS * R-12	RATINGS IN TONS * R-22	RATINGS IN TONS * R-502	MINIMUM SPEED FOR UNLOADER OPERATION	OIL CHG. (PINTS)	SUCT. LINE ODF (IN.)	DISCH. LINE ODF (IN.)	COMP. WT. (LB.)
5F20	5	10	10	2	2-1/2	2	19.8	5.18	8.46	8.85	600	5	1-1/8	7/8	175
5F30	7-1/2	15	15	3	2-1/2	2	29.8	7.76	12.7	13.2	700	5-1/2	1-5/8	1-3/8	215
5F40	10	20	20	4	2-1/2	2	39.8	10.5	16.8	17.7	800	12	1-5/8	1-3/8	355
5F60	15	25	25	6	2-1/2	2	59.6	15.7	25.3	26.5	900	13	2-1/8	1-5/8	400
5H40	25	40	40	4	3-1/4	2-3/4	92.4	24.7	39.6	40.5	800	18	2-5/8	2-1/8	610
5H46	40	60	60	4	3-1/4	3-7/16	115.5	30.6	49.1	50.2	800	18	2-5/8	2-1/8	610
5H60	40	60	60	6	3-1/4	2-3/4	138.4	37.0	59.4	60.9	900	21	3-1/8	3-1/8	795
5H66	50	75	75	6	3-1/4	3-7/16	173.0	45.9	73.8	75.4	900	21	3-1/8	3-1/8	795
5H80	50	75	75	8	3-1/4	2-3/4	184.7	49.4	79.2	81.2	1100	41	3-1/8	3-1/8	1115
5H86	75	100	100	8	3-1/4	3-7/16	231.0	61.1	98.2	100.7	1100	41	3-1/8	3-1/8	1115
5H120	75	125	125	12	3-1/4	2-3/4	276.0	74.0	119.0	122.0	900	61	4-1/8	4-1/8	1580
5H126	100	150	150	12	3-1/4	3-7/16	346.0	91.8	145.0	151.2	900	61	4-1/8	4-1/8	1580

NOTE: For Typical Compressor to Drive Motor Combinations see page 11.

NOTES:

1. * 40°F saturated suction, 105°F saturated discharge, 15°F superheat, 0°F subcooling
2. 45 PSIG net oil pressure (oil pressure PSIG—suction pressure PSIG)
3. ODF = Outside Diameter Female (in.)
4. Maximum RPM = 1750
5. Minimum RPM for lubrication = 400 RPM

COMPRESSOR DIMENSIONS

COMPRESSOR		5F				5H				5H			
		20	30	40	60	40	60	80	120	46	66	86	126
DIMENSIONS (in.)	A	15-7/8	18	21-1/2	23-1/2	30-1/2	31-1/2	43-7/8	47	30-1/2	31-1/2	43-7/8	47
	B	18-3/4	20-7/8	19	21	24-1/2	27-1/4	24-1/2	27-3/8	24-1/2	27-1/4	24-1/2	27-3/8
	C	18-3/4	18	20-1/8	24-1/2	29	29-7/8	32	34-7/8	29	29-7/8	32	34-7/8
Between	D	5-3/4	5-3/4	12	13-7/16	15-1/2	17	29	29	15-1/2	17	29	29
Mgt. hole ℄	E	10	10	8	8	11	11	11	11	11	11	11	11