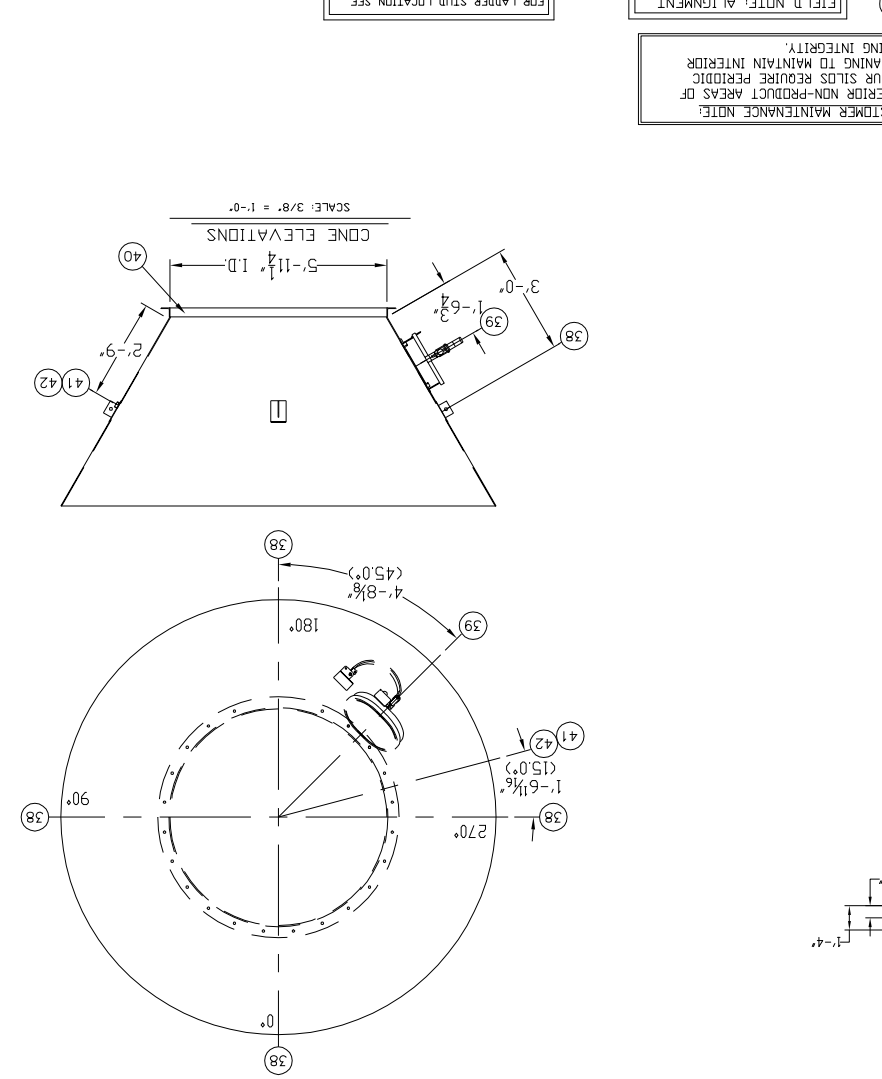


## BILL OF MATERIALS

| Key | Seq | QTY | UM | PART NUMBER | AT | LD | SC | DESCRIPTION | CODE |
|---|---|---|---|---|---|---|---|---|---|
| | 1 | 136.00 | EA | I10802S | X | | | ROOF DECK - PL 3/16 72 X 192 A36 (179 SHEETS) | A36 |
| | 2 | 268.00 | FT | I10802S | X | | | HOPPER - PL 3/16 72 X 192 A36 (353 SHEETS) | A36 |
| | 3 | 5.00 | EA | I11863S | X | | | CYLINDER - SH10 GA 72 X 455 A569-C0 | C0 |
| | 4 | 2.00 | EA | I11863S | X | | | CYLINDER - PL 3/16 72 X 455 A-36 STEEL | A36 |
| | 5 | 1.00 | EA | I11863S | X | | | CYLINDER - PL 3/16 72 X 455 A-36 STEEL | A36 |
| | 9 | 2.00 | EA | I22300S1 | X | | | LIFT LUG,SMALL LH (HRS) | A36 |
| | 10 | 2.00 | EA | I22300S2 | X | | | LIFT LUG,SMALL RH (HRS) | A36 |
| | 11 | 1.00 | EA | I14666S | X | | | FLANGE, 20" W/ 3" COLLAR A = 1'-4" EAVE PRJ | A36 |
| | 12 | 1.00 | EA | I14630S-2 | X | | X | CONE#20" DIA MANWAY W/4"DD-14GA 304SS TUBE,9"PROJ | HRS |
| | 13 | 1.00 | EA | I11301 | X | | | BOLT BAG 20" MANWAY(42)P,WHT (HRS) | A197 |
| | 14 | 2.00 | EA | I10952 | X | | X | COUPLING,1 1/4" NPT HALF (FLUSH TO INTERIOR) A197 | A197 |
| | 15 | 1.00 | EA | I14694-1/15 | X | | X | FILTER FLANGE - SEE DETAIL "A1" (HRS) | |
| | 16 | 1.00 | EA | I13S304S1 | X | | X | FLANGE,4"-150# RFSO (RAISED FACE SLIP ON) + A= 8" EAVE PRJ | HRS |
| | 17 | 1.00 | EA | I14694-1/17 | X | | | INSTALL SHICK SUPPLIED 24" DIA MANWAY | |
| | 18 | 5.00 | EA | I12S307S1 | | X | | STANDOFF,FENCED VERSION A=18" B= 4 1/2" | STL |
| | 20 | 2.00 | EA | I22302S0 | X | | | GROUNDING LUG,2" SQ W/ 9/16" DIA HOLE (CENTERED) | A36 |
| | 21 | 2.00 | EA | I90017S7 | | | | DECAL,DANGER,GROUNDING LUG ,DO NOT USE FOR LIFTING(2 1/2X4) | MISC |
| | 22 | 2.00 | EA | I22301S-1 | X | | | HANDRAIL,2" DIA,CD OPENING 1 1/2" SCH 40 PIPE | ALUM |
| | 23 | 2.00 | EA | I22301S-2 | X | | | BANDING BRACKET, (FOR SHIPPING) 3/4" HRS | A36 |
| | 24 | 1.00 | EA | I91J001 | X | | | BOLT BAG,12"-0" DIA HANDRAIL ASSY. (STL/SS) | ZP |
| | 25 | 24.00 | EA | I10909 | X | | | WELD STUD,1/2-13NC,1-1/2 316SS STAINLESS | MISC |
| | 26 | 1.00 | EA | I21301S | X | | | DOOR FRAME,12" DIA DOUBLE 6'-0" X 6'-8" (HRS TANKS) | MISC |
| | 27 | 1.00 | EA | I21310J7 | X | | | DOOR,3'-0" X 6'-8" (LH) W/ (2) LOUVERS AND LATCH (ALUM) | ALUM |
| | 28 | 1.00 | EA | I21310J8 | X | | | DOOR,3'-0" X 6'-8" (RH) W/(2) LOUVERS & ASTRAGAL (ALUM) | ALUM |
| | 29 | 1.00 | EA | I22302S3 | X | | | DOOR FRAME, RAIN GUTTER (DBL) | GAL/A |
| | 30 | 1.00 | EA | I21310J0 | X | | | DOOR HANDLE ASSEMBLY, SHIPPING PACKAGE | MISC |
| | 31 | 8.00 | EA | I21310J4 | | | | DOOR HINGE SHIM (10 GA) | GAL/A |
| | 32 | 1.00 | EA | I90J00J4S | X | | | NAME TAG,IMPERIAL INDUSTRIES 6"X16"X025 ALUM WITH SELF | MISC |
| | 33 | 1.00 | EA | I12S103 | X | | | CROSSWALK GRATING - 3'-0" (4'-6" LG) W/ ALUM STIFF ZP | GAL/A |
| | 34 | 2.00 | EA | I12S203J | X | | | CROSSWALK,HANDRAIL 3' - ALUM 1 1/2"SCH40 PIPE X 4'-0 1/2LG | ALUM |
| | 35 | 1.00 | EA | I12S02S | X | | | BOLT BAG,CROSSWALK ASSEMBLY 1' THRU 7' LONG (ZP) | MISC |
| | 36 | 1.00 | EA | I20J0001 | X | | | CLEANING PLATFORM,FOR 10 DEGREE ROOF DECKS | HRS |
| | 37 | 4.00 | EA | I20J000L7J12 | X | | | COMPRESSION RING1/4" X 3" FOR 12' DIA HRS TANK (90 DEG SEC) | MISC |
| | 38 | 4.00 | EA | I46946-1/38 | X | | | LIFTING LUGS (HRS) SEE DETAIL "D1" | |
| | 39 | 1.00 | EA | I46946-1/39 | X | | | INSTALL 17" X 24" ELLIPTICAL MANWAY SUPPLIED BY SHICK | |
| | 40 | 1.00 | EA | I40200J1 | X | | X | DISCHARGE FLANGE,5'-11 1/4" ID (HOLES STR CLS) | HRS |
| | 41 | 1.00 | EA | I10952 | X | | X | COUPLING1 1/4" NPT HALF (FLUSH TO INTERIOR) A197 | A197 |
| | 42 | 1.00 | EA | I10971S | X | | | PIPE PLUG1 1/4" SQ HD STL | STL |
| | 43 | 2.00 | EA | I22302S0J0.65 | X | | | ROOF STIFFENER,5/16' X 4" CS 5'-5" LONG | HRS |
| | 44 | 1.00 | EA | I22311901230J8 | X | | | DOOR STIFF,HORIZ,3 X 3 X 3/8 ANG, FOR 12' DIA TANKS (1 SET) | A36 |
| | 50 | 2.00 | EA | I22302S00 | X | | | BASE RING, L3X3X3/8' 12' TANK STEEL, 180 DEG SEG. | A36 |
| | 51 | 16.00 | EA | I22J073 | X | | | CLAMP PLATE,1' BOLT,W/3/8' SPACER | HRS |
| | 52 | 2.00 | EA | I08H5310J4 | X | | | DOOR STIFF,VERTICAL - WEXIS X 8"-8' LG A36/A572 GR50 | A36 |
| | 53 | 3.00 | EA | I90101S8 | X | | | PAINT,IRO2 AEROSOL S/W TO MATCH F69,IMPERIAL GLOSS WHITE' | |
| | 54 | 1.00 | EA | I90J003P/J | X | | | ID TAG, ALUMINUM (FOR INDUSTRIAL TANKS) | ALUM |
| | 55 | 30.00 | EA | I23S002L1 | | | | STANDOFF,BOLT PAD | A36 |
| | 56 | 15.00 | EA | I11310J3 | X | | | BOLT BAG,STANDOFF BRACKETS (PAD MOUNT) | ZP |
| | 57 | 5.00 | EA | I11310J6 | X | | | BOLT BAG, 4 3/16" U-BOLT | ZP |

## NOTES

**INTERIOR NOTES:**

**GRINDING CLASS #2:**
WELD SPATTER AND SLAG IS REMOVED USING A 'WIRE BRUSH' EXCESSIVE WELD GROWN AT STARTS AND STOPS IS REMOVED.

**GRINDING CLASS #1:**
WELD SPATTER AND SLAG IS REMOVED USING A 'WIRE BRUSH' EXCESSIVE WELD GROWN AT STARTS AND STOPS IS REMOVED. BURN THROUGH IS GROUND TO A 'NEAR' FLUSH 40-50' GRIT FINISH.

**INSPECTION CLASS #1:**
VISUAL (100%) TEST PROCEDURE PER IMP #111.

**INSPECTION CLASS #2:**
VISUAL (100%) TEST PROCEDURE PER IMP #111.

**EXTERIOR NOTES:**

**GRINDING CLASS #1:**
WELD SPATTER AND SLAG IS REMOVED USING A 'WIRE BRUSH' EXCESSIVE WELD GROWN AT STARTS AND STOPS IS REMOVED.

**CLEANING\BLASTING CLASS #1:**
'COMMERCIAL BLAST' PER SPEC. 'SSPC SP6-63' WHICH EQUALS 'NACE NO. 3'.

**CLEANING\BLASTING CLASS #2:**
'COMMERCIAL BLAST' PER SPEC. 'SSPC SP6-63'

**INSPECTION CLASS #1:**
VISUAL (100%) TEST PROCEDURE PER IMP #111.

**INSPECTION CLASS #2:**
VISUAL (100%) TEST PROCEDURE PER IMP #111.

**INTERIOR FINISH: (F.D.A.)**

| COATS | MFG. | PRODUCT DESCRIPTION | COLOR | PER COAT | TOTAL |
|---|---|---|---|---|---|
| 1 | SHERWIN WILLIAMS | HIGH SOLIDS CATALYZED EPOXY | WHITE | 4.0 TO 6.0 | 4.0 TO 6.0 |
| | | B62-W201/B60-V20 | | TOTAL = | 4.0 TO 6.0 |

**EXTERIOR FINISH:**

| COATS | MFG. | PRODUCT DESCRIPTION | COLOR | PER COAT | TOTAL |
|---|---|---|---|---|---|
| 1 | SHERWIN WILLIAMS | 28 VOC CATALYZED EPOXY PRIMER E61W280-3497/A69V282 | WHITE | 1.8 TO 2.2 | 1.8 TO 2.2 |
| 1 | SHERWIN WILLIAMS | POLANE HS PLUS POLYURETHANE ENAMEL | IMPERIAL GLOSS WHITE | 1.25 TO 1.5 | 1.25 TO 1.5 |
| | | F69V66-3301/A66V35 | | TOTAL = | 3.05 TO 3.7 |

FOR COLOR MATCHING INFORMATION CONTACT SHERWIN WILLIAMS @ (713) 355-1166

**SKIRT INTERIOR FINISH:**

| COATS | MFG. | PRODUCT DESCRIPTION | COLOR | PER COAT | TOTAL |
|---|---|---|---|---|---|
| 1 | SHERWIN WILLIAMS | HIGH SOLIDS CATALYZED EPOXY | WHITE | 4.0 TO 6.0 | 4.0 TO 6.0 |
| | | B62-W201/B60-V20 | | TOTAL = | 4.0 TO 6.0 |

SEE EXTERIOR NOTES FOR GRINDING & CLEANING CLASSES.

## DESIGN NOTES: IBC-2000

| | | |
|---|---|---|
| 02 SECOND SPECTRAL RESPONSE | 8.75 | % |
| 1 SECOND SPECTRAL RESPONSE | 3.88 | % |
| SEISMIC SITE CLASS | Sd | |
| SEISMIC IMP. FACTOR | 1.00 | |
| ANALYSIS PROCEDURE | EQUIVALENT LATERAL FORCE (ELFP) | |
| WIND IMPORTANCE FACTOR | 1.00 | |
| MAX. WIND SPEED | 90 | MPH (EXP. C) |
| MAX. DECK LIVE LOAD | 30 | PSF |
| MAX. MATERIAL DENSITY | 40 | LBS/FT$^3$ |
| MAX. INTERNAL PRESSURE | 0.38 | PSI |
| MAX. INTERNAL VACUUM | 0.03 | PSI |
| CAPACITY | 3,272 | CUBIC FOOT |
| SHIPPING WEIGHT | 12,700 | LBS |
| OPERATING WEIGHT | 173,000 | LBS |
| TEMPERATURE | AMBIENT | °F |

## FOUNDATION LOADS:

| | | |
|---|---|---|
| MAX. LOAD PER IN. OF BASE | 580 | LBS. |
| MAX. LOAD PER ANCHOR BOLT | 9,260 | LBS. |
| RECOMMENDED BOLT DIA. | 1 | A-36 |
| HORIZONTAL SHEAR | 10,610 | LBS. |
| OVERTURN MOMENT | 225,390 | FT-LBS. |

## SHIPPING NOTES:

COVER ALL OPENINGS WITH SHIPPING COVERS.
CAUTION DO NOT SEAL TANK COMPLETELY, CHANGES IN TEMP. OR ATMOSPHERIC PRESSURE MAY CAUSE DAMAGE TO THE TANK.

## TANK GAUGE SCHEDULE

| | | | | | |
|---|---|---|---|---|---|
| TOP DECK | (10°) | 3/16" | A36 | L. RAD. 10 5/16" | CIRC. 37'-6" |
| BOTTOM CONE | (60°) | 3/16" | A36 | L. RAD.11'-11 1/16" | S. RAD. 5'-11 3/8" CIRC.37'-5 3/8" |

## CUTTING SCHEDULE

| | | | | |
|---|---|---|---|---|
| 1st CYL. | 72" | 10 GA | A569-C0 | CIRC. |
| 2nd CYL. | 72" | 10 GA | A569-C0 | CIRC. |
| 3rd CYL. | 72" | 10 GA | A569-C0 | CIRC. |
| 4th CYL. | 72" | 10 GA | A569-C0 | CIRC. |
| 5th CYL. | 72" | 10 GA | A569-C0 | CIRC. |
| 6th CYL. | 72" | 3/16" | A36 | CIRC. |
| 7th CYL. | 72" | 3/16" | A36 | CIRC. |
| 8th CYL.71 3/4" | OF | 3/16" | A36 | CIRC. |

## INSTALLATION/CONTRACTOR NOTES:

1) DAMAGE TO EXTERIOR PROTECTIVE COATINGS MAY OCCUR DURING SHIPPING. IMPERIAL-CALMET INDUSTRIES INC. SUPPLIES TOUCH-UP PAINT TO REPAIR THE FINAL COAT. SURFACE PREPARATION AND APPLICATION IS THE RESPONSIBILITY OF THE INSTALLATION CONTRACTOR.
2) ITEMS MARKED IN THE BILL OF MATERIAL 'LOS' COLUMN INDICATE THAT THESE ITEMS ARE SHIPPED LOOSE. ATTACHMENT TO THE TANK IS THE RESPONSIBILITY OF THE INSTALLATION CONTRACTOR.
3) BACK CHARGES FOR REWORK OR CORRECTIONS WILL NOT BE ACCEPTED WITHOUT PRIOR AUTHORIZATION FROM THE MANUFACTURER.

QUOTE #:115-64341-03
CUSTOMER REF:
HIGH PROTEIN WHITE FLOUR

MANUFACTURING TOLERANCES PER E5531

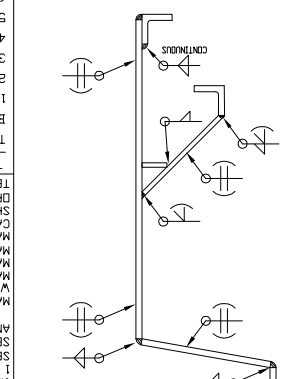


TYPICAL WELD DETAIL #2

| REV | BY | DATE | DESCRIPTION |
|---|---|---|---|
| 1 | BMW | 5/3/07 | REVISED PER CUSTOMER APPROVAL |
| 2 | BMW | 5/18/07 | REVISED PER IMPERIAL DESIGN CHECK |
| 3 | | | |
| 4 | | | |
| 5 | | | |
| 6 | | | |
| 7 | | | |

IMPERIAL INDUSTRIES INCORPORATED
IMPERIAL-CALMET DIVISION OF VAUGHN TUBE, INC.

| | | | |
|---|---|---|---|
| DRAWN BY: B. WAITE | DATE: 3-22-07 | SCALE: AS NOTED | |
| CHECKED BY: B. PENCE | DATE: 5/11/07 | | |
| PRODUCTION: B. FITT | DATE: 5/18/07 | REVISION: 2 | |

DRAWING NAME: TANK ASSEMBLY DRAWING

SOLD TO: SHICK TUBE -VEYOR CORPORATION / KANSAS CITY, MO
SHIP TO: AUSTIN, TX

(1) 60" 40# 12'-0" X 48'-0" EAVE HI. (STEEL) SKIRTED TANK

DRAWING NUMBER: I-46947-1
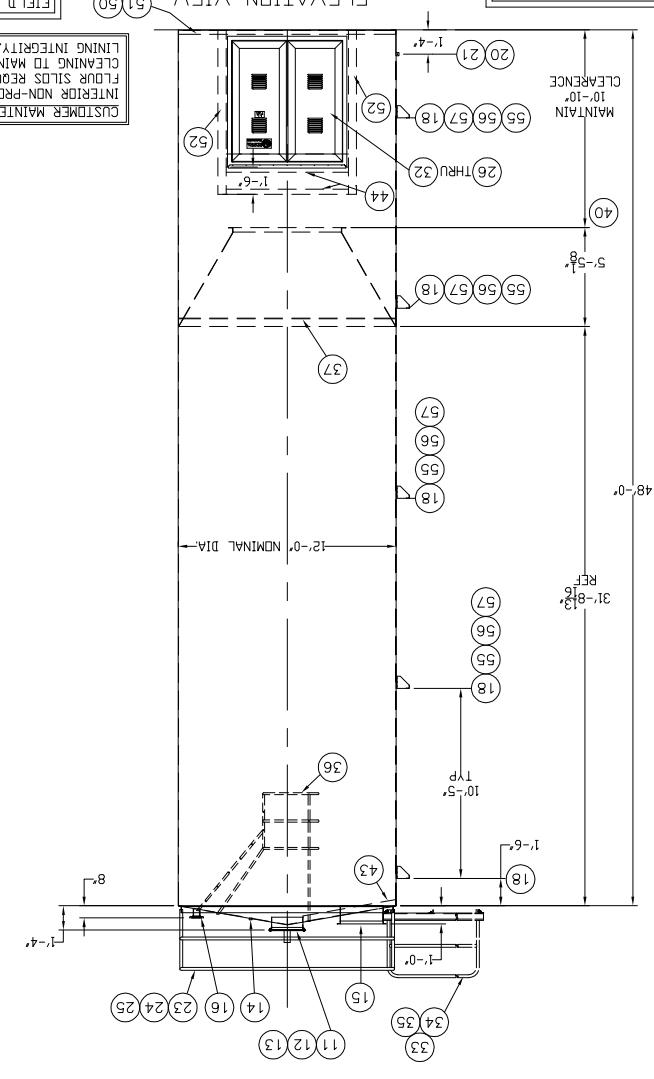
FOR TANK ANCHOR BOLT LAYOUT SEE DRAWING NO: 901-0060